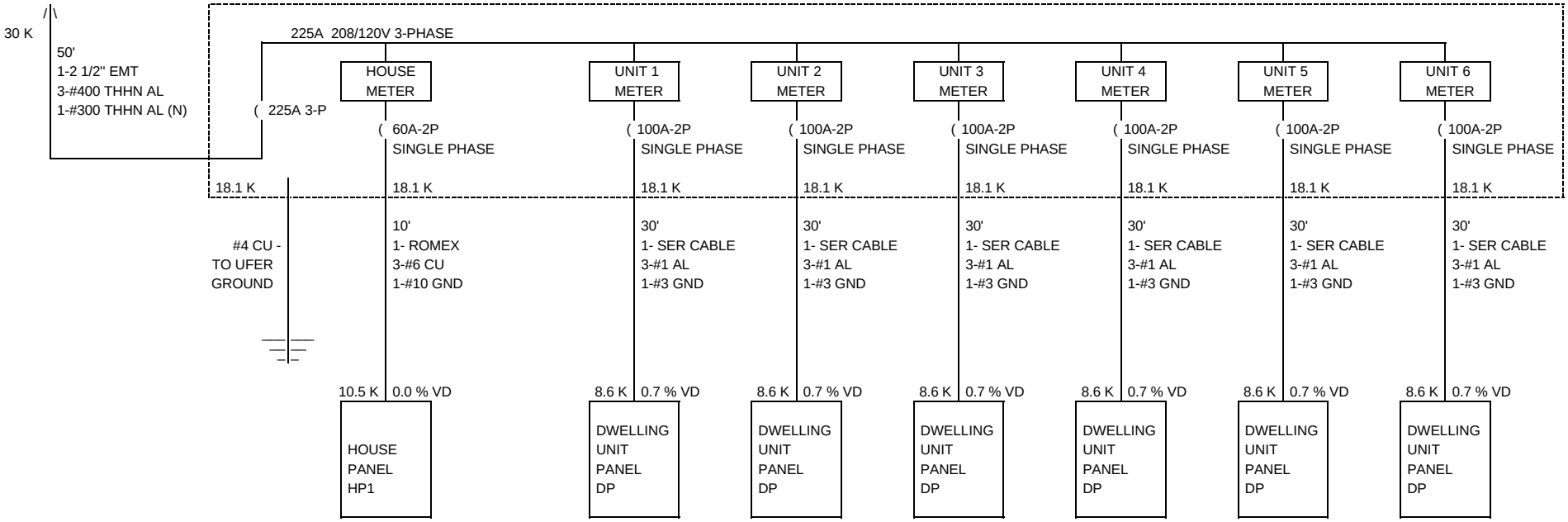
30 K
50'
1-2 1/2" EMT
3-#400 THHN AL
1-#300 THHN AL (N)
225A 208/120V 3-PHASE
(225A 3-P
HOUSE METER
UNIT 1 METER
UNIT 2 METER
UNIT 3 METER
UNIT 4 METER
UNIT 5 METER
UNIT 6 METER
(60A-2P SINGLE PHASE
(100A-2P SINGLE PHASE
18.1 K
#4 CU - TO UFER GROUND
10'
1- ROMEX
3-#6 CU
1-#10 GND
30'
1- SER CABLE
3-#1 AL
1-#3 GND
10.5 K
0.0 % VD
8.6 K
0.7 % VD
HOUSE PANEL HP1
DWELLING UNIT PANEL DP